KEYED NOTES

1. VERIFY WITH SERVICE PLANNER FOR AIC RATING AND ELECTRICAL INFORMATION BEFORE ISSUING ANY BID. NOTIFY ENGINEER IMMEDIATELY IF MAJOR DISCREPANCIES OCCURS.
2. STUB UP CONDUIT FOR PV SYSTEM. PV SYSTEM SHALL BE SUBMITTED UNDER A SEPARATE PERMIT. ELECTRICAL CONTRACTOR SHALL COORDINATE WITH PV CONSULTANT FOR THE EXACT SIZE OF CONDUIT AND ALL ELECTRICAL REQUIREMENTS.
3. OVERCURRENT DEVICE 1200AMP AND GREATER SHALL COMPLY WITH CEC 240-87. PROVIDE ERMS SWITCH WITH LOCAL ATATUS INDICATER TO REDUSE ARC FLASH ENERGY. LABEL EQUIPMENT WHAT THE ARC FLASH HAZARD.

GENERAL NOTES

1. THE MAXIMUM AVAILABLE FAULT CURRENT IS BASED ON WORST CASE FAULT CURRENT PUBLISHED BY THE UTILITY COMPANY. CONTRACTOR TO OBTAIN FAULT CURRENT LETTER FROM UTILITY COMPANY FOR EACH SERVICE BEFORE ORDERING SWITCHBOARD. IF AVAILABLE FAULT CURRENT IS HIGHER THAN SHOWN IN THE DRAWINGS, CONTACT ELECTRICAL ENGINEER IMMEDIATELY.
2. LETTER FOR SHORT CIRCUIT CURRENT VALUE FROM UTILITY COMPANY SHALL BE AVAILABLE AT THE JOB SITE FOR INSPECTION.
3. ELECTRICAL EQUIPMENT SHALL BE LISTED BY THE CITY, WHERE THE PROJECT IS LOCATED, RECOGNIZED ELECTRICAL TESTING LABORATORY OR APPROVED BY THE DEPARTMENT.
4. ALL NEW CIRCUIT BREAKERS, FUSIBLE SWITCHES AND ELECTRICAL EQUIPMENT SHALL BE SERIES RATING.
5. ALL SWITCHBOARDS AND DISTRIBUTION BOARDS SHALL HAVE:
   - 5.1. TIN-PLATED ALUMINUM BUSSING WITH RECTANGULAR CROSS SECTION. HORIZONTAL AND VERTICAL BUSSING SHALL BE FULL LENGTH AND SHALL HAVE PROVISIONS FOR FUTURE EXTENSIONS. ALL BUSSING SHALL HAVE MINIMUM WITHSTAND RATING EQUAL TO THE AVAILABLE FAULT CURRENT INDICATED. ALL VERTICAL AND HORIZONTAL BUSSING SHALL BE RATED AT FULL CAPACITY IN ALL SWITCHBOARD AND DISTRIBUTION BOARD SECTIONS. PROVIDE 100% NEUTRAL BUSSING MINIMUM UNLESS OTHERWISE NOTED. PROVIDE FULL LENGTH GROUND BUS AND, WHERE INDICATED ON PLANS, ISOLATED GROUND BUSSING. PROVIDE REAR WIRE WAY IN ALL SWITCHBOARD SECTIONS.
   - 5.2. LUGS SUITABLE FOR USE WITH COPPER OR ALUMINUM CONDUCTORS LISTED FOR USE WITH 75 DEGREE CELSIUS AMPACITY CONDUCTORS.
   - 5.3. PERMANENT PLACARD(S) MARKED PER THE SPECIFICATIONS AND PER CEC-WHERE ADOPTED SECTIONS 225.37, 230.2(E), 690.56, 692.56, 700.7, 701.7, 702.7, AND 705.10 DENOTING THE PRESENCE OF ADDITIONAL SERVICES, PHOTOVOLTAIC SYSTEMS, FUEL CELLS, EMERGENCY OR STAND-BY POWER SOURCES AS APPLICABLE.
   - 5.4. SINGLE LINE DIAGRAM SHOWN IS A "SERIES RATING SYSTEM" UNLESS NOTED. OTHERWISE.
   - 5.5. THE MAXIMUM COMBINED VOLTAGE DROP ON BOTH INSTALLED FEEDER CONDUCTORS AND BRANCH CONDUCTORS TO THE FARTHEST CONNECTED LOAD OR OUTLET SHALL NOT EXCEED 5 PERCENT.
   - 5.6. ALL ELECTRICAL EQUIPMENT SHALL BE LABELED, LISTED, OR CERTIFIED BY A NATIONALLY RECOGNIZED TESTING LABORATORY ACCREDITED BY THE "UNITED STATES OCCUPATIONAL SAFETY HEALTH ADMINISTRATION".
   - 5.7. SERVICE ENTRY SER CABLE IS PERMITTED TO BE USED IN CONSTRUCTION TYPE 3,4 AND 5 PER CEC 338.1 AND BE INSTALLED PER CEC 338.10.
6. FAULT CURRENT SHALL BE CALCULATED AND POSTED ON SITE PRIOR TO FINAL INSPECTION PER CEC ARTICLE 110.24.
7. PERFORMANCE TESTING PER CEC ARTICLE 230.95.
8. ARC ENERGY REDUCTION METHOD PER CEC ARTICLE 240.87(B).
9. MANUFACTURE EQUIPMENT DATA SHALL BE ON SITE DURING CONSTRUCTION, INSPECTION AND OPERATION PER CEC ARTICLE 240.87(A).

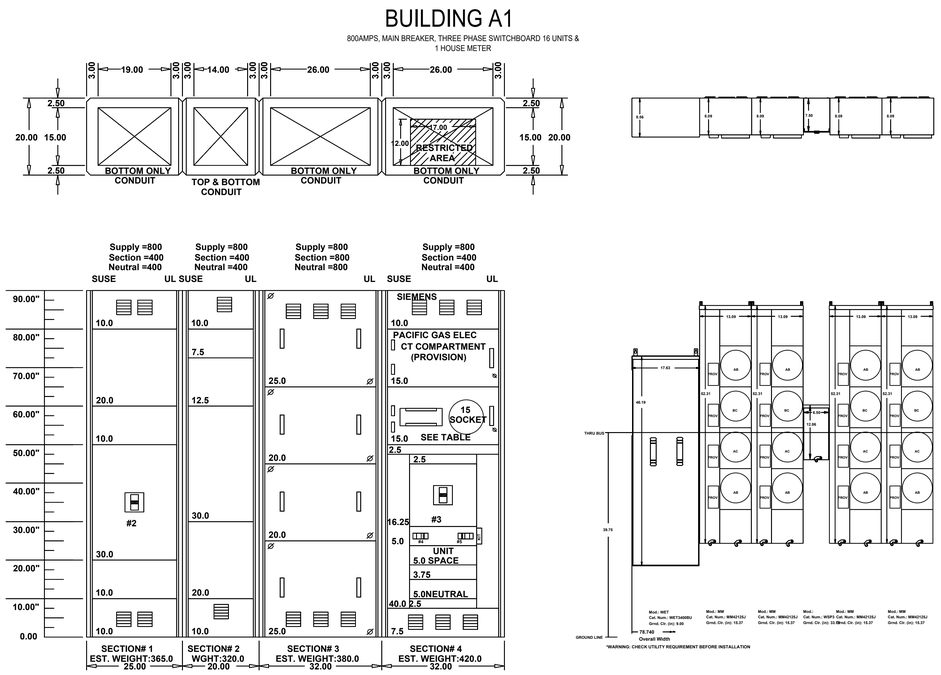

A ELECTRICAL EQUIPMENT ELEVATION - BUILDING A1
SCALE: 1/2" : 1'-0"

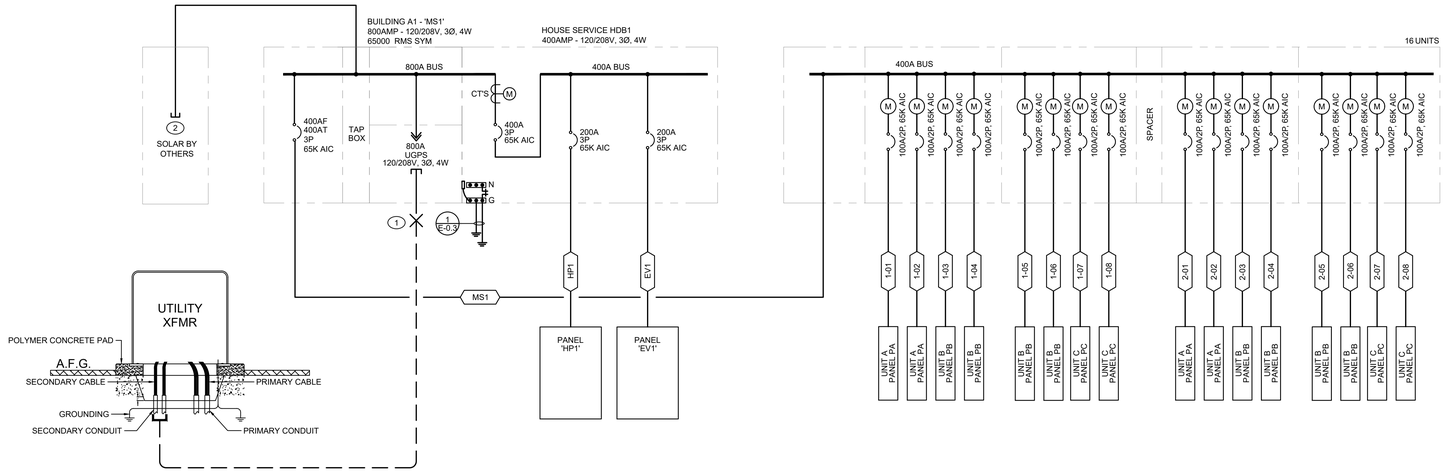

Voltage Drop and Short Circuit Calculation

					FEEDER					CONDUIT					FAULT CURRENT				
CABLE NAME	PANEL NAME	UNIT/ CIRCUIT	VOLTS	PHASE	DEMAND AMPS	AMPS	PARALLEL RUNS	PHASE CONDUCTOR	EQUIPMENT GROUNDING CONDUCTOR	CONDUCTOR MATERIAL	CONDUCTOR INSULATION	CONDUIT TYPE	CONDUIT SIZE	FILL% (<40%)	DISTANCE (FT) 'L'	%VD	FAULT CURRENT	Isc	AIC
HP1	HP1	HOUSE	208	3	200	200	1	250	4	ALUM	THHN	EMT	2 1/2	28.51%	35	0.58	65000	25363	42000
EV1	EV1	EV PANEL	208	3	200	200	1	250	4	ALUM	THHN	EMT	2 1/2	28.51%	35	0.58	65000	25363	42000
MS1	MS1	BUILDING A1	208	3	363	400	2	250	1	ALUM	THHN	PVC	2 1/2	37.15%	20	0.3	65000	45748	65000
1-01	PA	UNIT A	208	1	90	100	1	1	4	ALUM	THHN	SER	NaN	-	47	1.02	45748	8393	10000
1-02	PA	UNIT A	208	1	90	100	1	1	4	ALUM	THHN	SER	NaN	-	26	0.56	45748	13213	22000
1-03	PB	UNIT B	208	1	90	100	1	1	4	ALUM	THHN	SER	NaN	-	78	1.69	45748	5455	10000
1-04	PB	UNIT B	208	1	90	100	1	1	4	ALUM	THHN	SER	NaN	-	99	2.14	45748	4409	10000
1-05	PB	UNIT B	208	1	90	100	1	1	4	ALUM	THHN	SER	NaN	-	117	2.53	45748	3787	10000
1-06	PB	UNIT B	208	1	90	100	1	1	4	ALUM	THHN	SER	NaN	-	96	2.08	45748	4533	10000
1-07	PC	UNIT C	208	1	90	100	1	1/0	4	ALUM	THHN	SER	NaN	-	164	2.84	45748	3392	10000
1-08	PC	UNIT C	208	1	90	100	1	2/0	3	ALUM	THHN	SER	NaN	-	185	2.56	45748	3712	10000
2-01	PA	UNIT A	208	1	90	100	1	1	4	ALUM	THHN	SER	NaN	-	56	1.21	45748	7258	10000
2-02	PA	UNIT A	208	1	90	100	1	1	4	ALUM	THHN	SER	NaN	-	37	0.8	45748	10157	22000
2-03	PB	UNIT B	208	1	90	100	1	1	4	ALUM	THHN	SER	NaN	-	89	1.93	45748	4852	10000
2-04	PB	UNIT B	208	1	90	100	1	1	4	ALUM	THHN	SER	NaN	-	108	2.34	45748	4075	10000
2-05	PB	UNIT B	208	1	90	100	1	1	4	ALUM	THHN	SER	NaN	-	126	2.73	45748	3538	10000
2-06	PB	UNIT B	208	1	90	100	1	1	4	ALUM	THHN	SER	NaN	-	107	2.31	45748	4109	10000
2-07	PC	UNIT C	208	1	90	100	1	2/0	3	ALUM	THHN	SER	NaN	-	175	2.42	45748	3906	10000
2-08	PC	UNIT C	208	1	90	100	1	2/0	3	ALUM	THHN	SER	NaN	-	194	2.69	45748	3554	10000

NOTE :THE VOLTAGE DROP IN THE ABOVE TABLE IS AN ESTIMATED LENGTH.THE CONTRACTOR SHALL REVISE THE FEEDER SCHEDULE BASED ON THE ACTUAL LENGTH IN THE FIELD, AND INCREASE OR DECREASE THE FEEDER SIZE TO ACCOMMODATE THE VOLTAGE DROP. ELECTRICAL CONTRACTOR SHALL INFORM THE ENGINEER OF RECORD IN EVENT FIELD CONDITIONS THAT CAUSE A SUBSTANTIAL INCREASE IN OVERALL FEEDER LENGTH. THE FEEDER SHALL BE SIZED TO PREVENT VOLTAGE DROP FROM EXCEEDING 3%, AND TOTAL VOLTAGE DROP FOR BRANCH CIRCUIT AND FEEDER SHALL NOT EXCEED 5% PER CEC 210.19,215.2.

SINGLE LINE DIAGRAM - BUILDING A1

all ideas, designs and plans represented by this drawing are the exclusive property of withee malcolm architects, llp and shall not be reproduced in whole or in part without the express prior written permission of said architects

WILLOW GROVE
BUTTONWILLOW & E. DINUBA AVE
REEDLEY, CA. 93654

SHEET TITLE
SINGLE LINE DIAGRAM
BUILDING A1

66334 PGE

SHEET NO.
E-0.4

4/18/2024
3RD PLAN CHECK SUBMITTAL